Size	L	H1	H2	H3	C	øD	fA1	øA1	Mounting	PCDøM	øM1
14'	3.07"	11.93"	12.95"	1.14"	12.80"	16.22"	1.06"	1.38"	F12(S.T)/F14	4.92"(S.T)/5.51"	0.51"(ST)/0.71"
16"	4.02"	13.13"	14.21"	1.14"	14.76"	18.70"	1.06"	1.38"	F12(S.T)/F14	4.92"(S.T)/5.51"	0.51"(ST)/0.71"
18"	4.49"	14.11"	15.47"	1.50"	16.65"	20.87"	1.42"	1.97"	F14(S.T)/F16	5.51"(S.T)/6.50"	0.71"(ST)/0.87"
20"	5.00"	15.45"	16.81"	1.50"	18.62"	23.03"	1.42"	1.97"	F14(S.T)/F16	5.51"(S.T)/6.50"	0.71"(ST)/0.87"
22"	6.06"	16.63"	17.99"	1.50"	20.08"	25.08"	1.42"	1.97"	F14(S.T)/F16	5.51"(S.T)/6.50"	0.71"(ST)/0.87"
24"	6.06"	17.89"	19.37"	1.89"	22.05"	27.05"	1.81"	2.36"	F16	6.50"	0.87"

FACE TO FACE DIMENSIONS:
ISO 5752 TABLE 5 SHORT.
FLANGE:ANSI 125/150.
BS TABLE E.
JIS 10K.
DIN PN10.
DIN PN16.
MOUNTING FLANGE:ISO 5211
PRESSURE CLASS :150 PSI

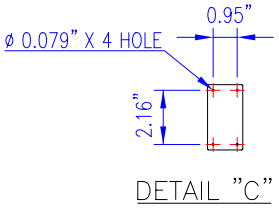

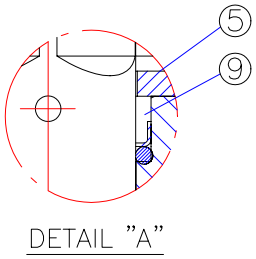

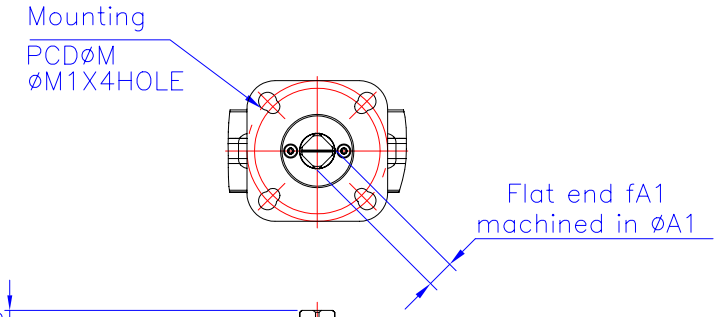

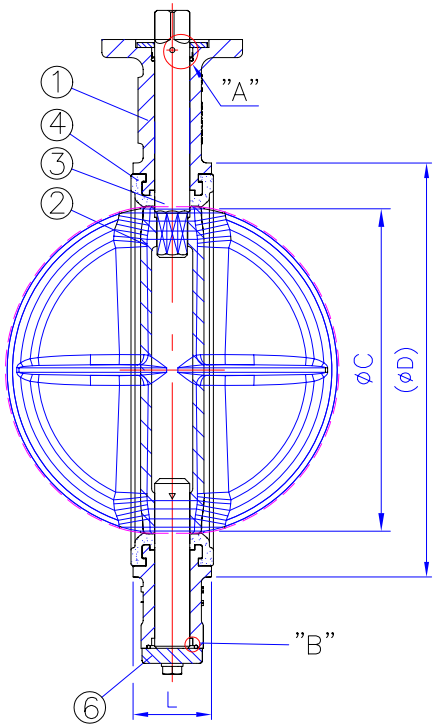

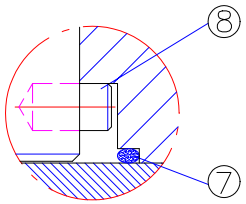

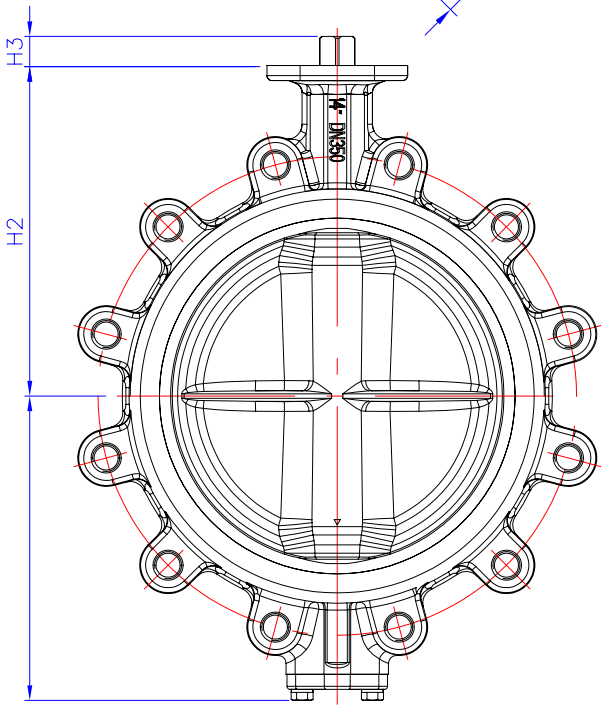

MATERIAL TABLE (ASTM)	
BODY	DISC
A126-B	A395
A395	A351 CF8
	A351 CF8M
	B148-954
SEAT	STEM
NBR	A182 F6A
EPDM	A182 F304
NEOPRENE	A182 F316
SILICON	
HYPALON	
VITON	

ITEM NO.	PART NAME	Q'TY	MATERIAL
9	BUSH	1	ASTM A240 304
8	STOP PIN	3	ASTM A182 F304
7	O-RING	2	NBR
6	BOTTOM	1	ASTM A126-B
5	UP COVER	1	ASTM A126-B
4	SEAT	1	SEE MATERIAL TABLE
3	STEM	2	SEE MATERIAL TABLE
2	DISC	1	SEE MATERIAL TABLE
1	BODY	1	SEE MATERIAL TABLE

VALUE

VALUE VALVES USA
GRAPEVINE, TEXAS 76051
TEL:(817) 421-5343 FAX:(817) 416-6270

DESN BY	CHK BY	AUTH BY	ISSUE DATE	93/6/8
			MATERIAL	
			SCALE	1/6
			UNIT	INCH

VF-733 BUTTERFLY VALVE
ø14"~ø24" BARE SHAFT

SIZE	DRAWING NO	REV
A4	T733040N01USA	1